ROTARY PLOUGH -Swivel version ARV.D4
EXPLODED VIEW - Page 1/2
Vers. Dec. 2014 - English

BERTA s.r.l.
14042 Calamandrana - ITALY

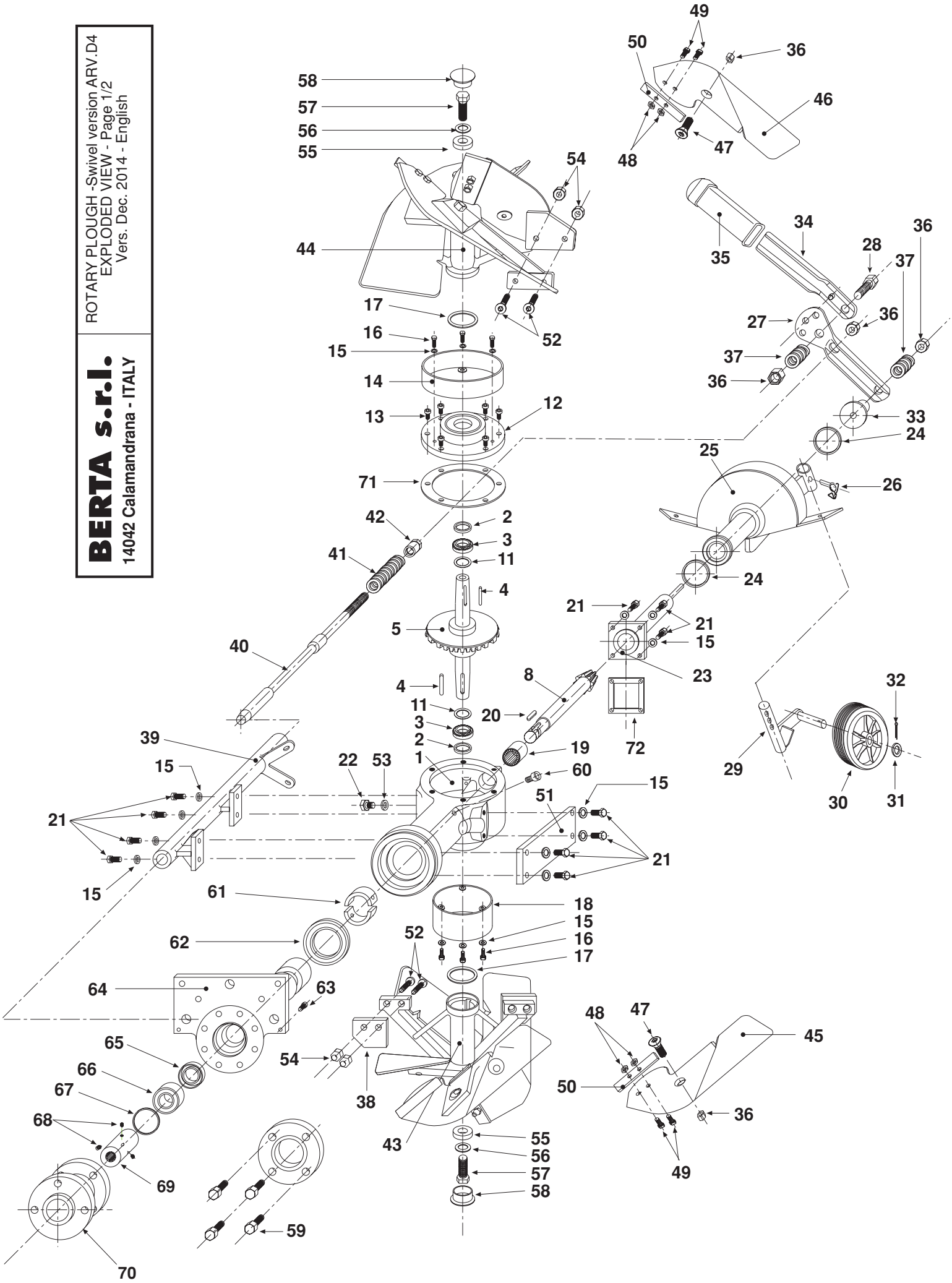

Berta S.r.l.
I - 14042 Calamandrana (Asti)

Rotary Plough - Swivel version ARV.D4 **PAGE 1/2**
SPARE PARTS LIST **Vers. Dec. 2014**

Pos.	DESCRIPTION	Code spare	Qnt	
1	GEAR BOX	13003	1	
2	OIL RETAINER 30x45x8	6004	2	
3	TAPER ROLLER BEARING 30206	5010	2	
4	KEY-SPLINE 8x7x60	10017	2	
5	Vertical shaft with gear wheel Z=32 (For ARVD4)	13027	1	
8	PINION GEAR Z= 8 TEETH (For ARVD4)	10024	1	
11	SHIM ADJUSTMENT RING 30,5x50x0,1	10018	5	
12	GEAR BOX COVER	13003	1	
13	Socket head screw M8x20 - DIN 912 - galvanized	2402	6	
14	RING FOR GRASS ANTIROLLING-UP (L=53)	13005	1	
15	GROWER M8 - DIN 127 B REINFORCED	4021	18	
16	HEXAGON HEAD SCREW M8x20 - DIN 933	2017	6	
17	FELT WASHER	10020	2	
18	RING FOR GRASS ANTIROLLING-UP (L=68)	10009	1	
19	NEEDLE BEARING NK 28/20	5011	1	
20	KEY-SPLINE 6X6X25	7018	1	
21	HEXAGON HEAD SCREW M8X25 - DIN 933	2003	12	
22	Oil Cap - Hexagon Head Screw M10x20-DIN 933 galvaniz.	2010	1	
23	Tail Pin	13006	1	
24	O RING 144	7060	1	
25	Rear Support for main Cover and Wheel	13007	1	
26	FAST PIN Ø 8x45	8006	1	
27	LEVER - BASE	13008	1	
28	HEXAGON HEAD SCREW M12X40- DIN 931-galvanized	2013	1	
29	ADJUSTABLE ROD	13002	1	
30	WHEEL	10030	1	
31	WASHER Ø28XØ20X2 - galvanized	10044	1	
32	SPLIT PIN Ø3xL40 - galvanized	10045	1	
33	THRUST WASHER	13011	1	
34	LEVER - EXTENSION	13009	1	
35	HANDGRIP	13012	1	
36	SELF LOCKING NUT M12 (HIGH) DIN 982	3506	11	
37	SPRING Ø19XL21	13013	2	
38	ROTATING BLADE (for grass cutting)	10013	4	

Pos.	DESCRIPTION	Code spare	Qnt	
39	CYLINDER - FOR BLOCKING PIN SLIDING	13014	1	
40	BLOCKING PIN	13015	1	
41	SPRING Ø19XL108	13016	1	
42	CAP WITH HOLE	13017	1	
43	HUB SUPPORTING PLOWSHARE (right-hand)	10010	1	
44	HUB SUPPORTING PLOWSHARE (left-hand)	10011	1	
45	RIGHT-HAND PLOWSHARE	10014	4	
46	LEFT-HAND PLOWSHARE	10015	4	
47	FLAT AND SOCKET HEAD SCREW M12x35 DIN 7991-galv.	2702	8	
48	SELF-LOCKING NUT M8 (low-thickness) DIN 985	3510	16	
49	HEXAGON HEAD SCREW M8X20 - DIN 933 - galvanized	2040	16	
50	CHANGEABLE TIP	10016	8	
51	STATIONARY BLADE (for grass cutting)	13020	1	
52	FLAT AND SOCKET HEAD SCREW M10x35 DIN 7991-galv.	2701	8	
53	WASHER M10 - DIN 433	4002	1	
54	SELF-LOCKING NUT M10 (low-thickness) DIN 985	3501	8	
55	WASHER Ø35XØ12,5X10	10027	2	
56	GROWER M12 - DIN 127 B REINFORCED	4020	2	
57	HEXAGON HEAD SCREW M12X35 - DIN 933	2021	2	
58	PLASTIC CAP	8007	2	
59	Hexagon Head Screw M12X20-DIN 933 (for bolted hitch)	2031	4	
60	Socket head screw M8x12 - DIN 912 - galvanized	2408	4	
61	SPLIT RING	13018	1	
62	OIL RETAINER 70X90X10	6013	1	
63	Socket head screw M6x10 - DIN 912 - galvanized	2409	2	
64	CORE - HOLLOW SHAFT	13019	1	
65	OIL SEAL 28X38X7	6014	1	
66	BEARING 6205 2RS 25X52X16	5005	3	
67	O RING 3193	7055	1	
68	GRUB-SCREW M8X10 DIN 914-45H	7016	3	
69	PTO SHAFT - 3 TEETH - (FOR BCS 740 BOLTED HITCH)	11003	1	
70	FLANGE (FOR BCS 740 BOLTED HITCH)	12001	1	
71	Gasket-(Guarnizione) Ø160x130x0,5 - 6 holes	10051	1	
72	Gasket-(Guarnizione) 70x70x0,5 - 4 holes	10052		
*Note:	Complete wheel assembly for Swivel Plough:			
	13002 adj.rod +10030 wheel +10044 washer +10045 split pin	13001	1	

BERTA s.r.l.
14042 Calamandrana - ITALY

ROTARY PLOUGH-Swivel version ARV.D4
EXPLODED VIEW - Page 2/2
Vers. Dec. 2014 - English

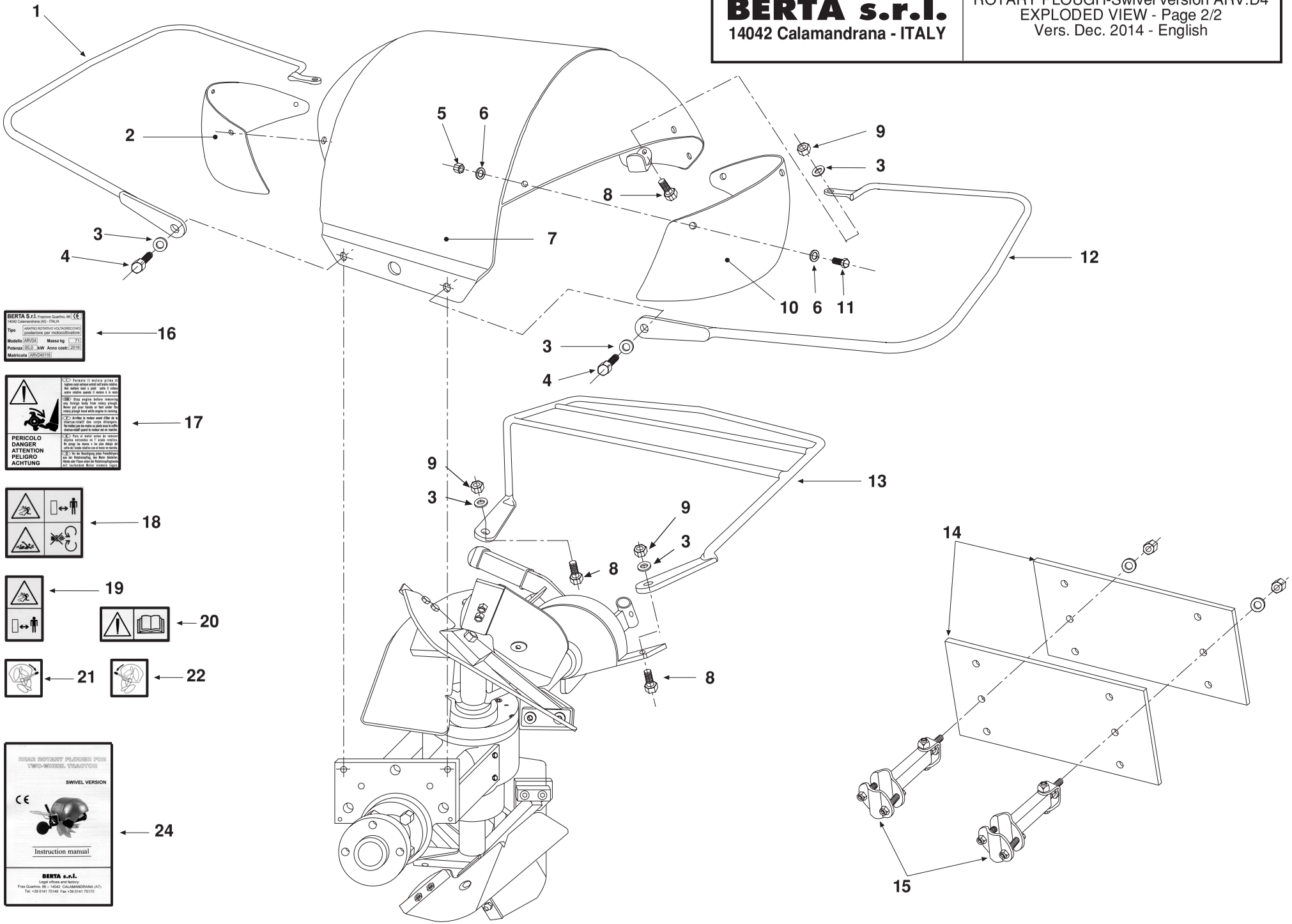

Pos.	DESCRIPTION	Code spare	Qnt		Pos.	DESCRIPTION	Code spare	Qnt	
1	RIGHT ROD GUARD	13021	1						
2	RIGHT COVER	13024	1						
3	WASHER M10 - DIN 433	4002	4						
4	HEXAGON HEAD SCREW M10X20-DIN933 - galvanized	2010	2						
5	SELF LOCKING NUT M6 (high) DIN 982	3502	6						
6	WASHER M6 - DIN 125A	4011	12						
7	MAIN COVER	13026	1						
8	HEXAGON HEAD SCREW M10X40-DIN933 - galvanized	2041	2						
9	SELF LOCKING NUT M10 (low) DIN 985	3501	2						
10	LEFT COVER	13025	1						
11	HEXAGON HEAD SCREW M6x16 - DIN933 - galvanized	2042	6						
12	LEFT ROD GUARD	13022	1						
13	REAR GUARD	13023	1						
14	COUNTER WEIGHT PLATE (5,4 Kg each)	11031	2						
15	BRACKET WEIGHT KIT	11030	2						
16	LABEL: Product Identification CE	1050	1						
17	LABEL: Wheels setting and balancing	1038	1						
18	LABEL: Keep distance + rotating shaft	1037	1						
19	LABEL: Beware of flying objects	1034	1						
20	LABEL: Read manual	1031	1						
21	LABEL: Righ-hand discharge position	1039	1						
22	LABEL: Left-hand discharge position	1040	1						
24	Instruction book (Swivel version) - Edition 12/2014	1048	1						